WORLDS AWAY



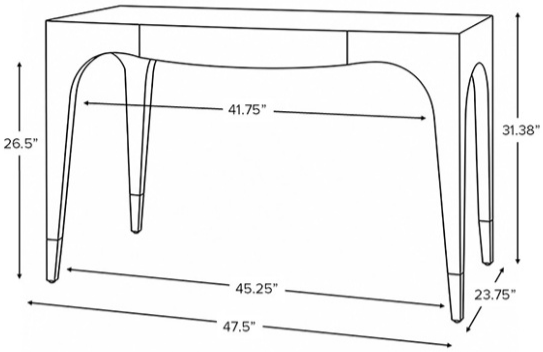

MANDI WH

31.38"H X 47.5"W X 23.75"D

DETAILS

Drawer Interior Dimensions:
- 1.625"H x 21.75"W x 15.25"D
Drawer Face Dimensions:
- - 3.875"H x 23.75"W

Floor Clearance: 27.375"H

Leg Clearance: 26.5"H x 41.5"W x 23.8125"D

HARDWARE

Pull Qty: none

Soft Close
Foot Levelers

FEATURES

Tapered legs 3 to 1

FINISH

white lacquer
AF01WH
BM OC-66 Snow White

antique brass
M01ABR

CARE INSTRUCTIONS
Clean with a dry soft cloth

ASSEMBLY REQUIRED: No

SHIPPING
Freight

BOX DIMENSIONS
32"H X 36"W X 54"D

SHIPPING WEIGHT
95 LBS