WORLDS AWAY



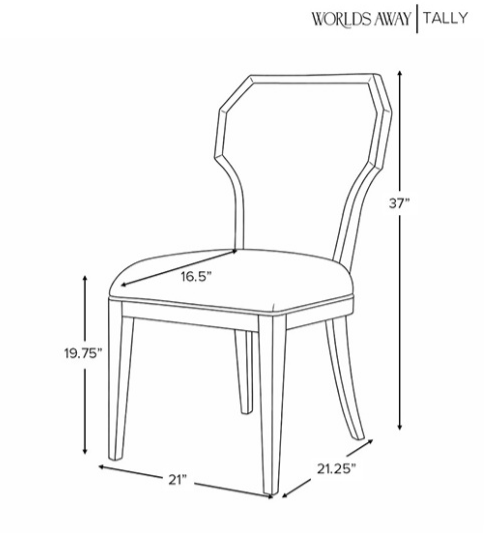

TALLY CO

37"H X 21"W X 21.25"D

DETAILS

Floor Clearance: 14.75"H
Seat Height (top to floor): 19.75"H
Seat Cushion: 20.5"W X 16.5"D
Backrest: 18.75"H X 21"W X 0.75"D

FEATURES

Seat Attachment: upholstered
Weight Capacity: 225 lbs
Material: white linen weave
Performance Fabric
Estimated yardage: 1.5 (solids)
*Not avilable in COM by Worlds Away

FINISH



cerused oak
V04CO

performance white linen
F03LWHP

*Variations in tone, grain, and texture are expected in natural materials and contribute to the uniqueness of each piece

CARE INSTRUCTIONS
Clean with a dry soft cloth

ASSEMBLY REQUIRED: No

SHIPPING
Low Weight Freight to a Business

BOX DIMENSIONS
41"H X 24"W X 25"D

SHIPPING WEIGHT
32 LBS